INSTALLATION GUIDANCE

EASY brushed stainless steel 90° angled right grab bar

B&M SKU: ID12001IS-DX Idral code: 12001IS-DX

Installation sequence

1. Confirm the exact length, orientation and fixing dimensions in the technical specification before marking the wall.
2. Fix the bar only to a sound supporting structure suitable for the loads stated in the technical specification.
3. Select suitable anchors for the wall construction. Do not assume that wall or floor anchors are supplied.
4. Assemble the mounting components as shown in the Idral instructions and secure every fixing point.
5. Check stability before use. For folding models, verify free movement and adequate clearance through the complete folding range.

Important

For wall-mounted bars, follow Idral's mounting arrangement for the relevant 30 mm or 32 mm tube system. The model-specific technical sheet remains the dimensional reference.

INSTALLATION GUIDANCE

EASY brushed stainless steel 90° angled right grab bar

B&M SKU: ID12001IS-DX Idral code: 12001IS-DX

Idral assembly details

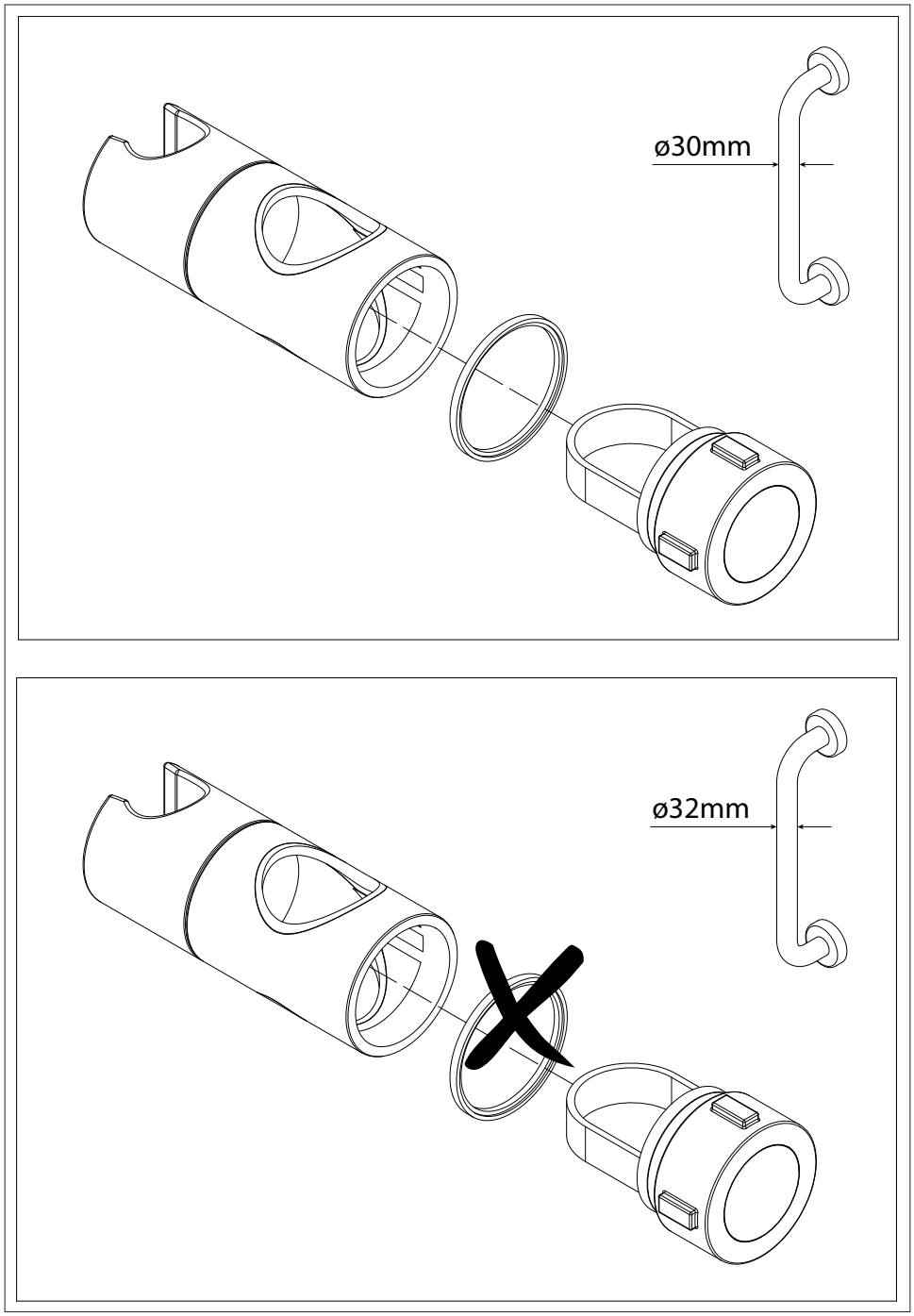

Source: Idral ISTA28-01 / page 3